Technical data sheet

Tilting anchor

Item number: 3482057

One washer and one hexagonal nut, with ceiling hook.
Note: Reckon with 5x safety for luminaire suspensions.

CE

St	Steel
G	Electrogalvanized

Master data

Item number	3482057
Type	455 M5x65 G
Description 1	Tilting anchors
Description 2	with ceiling hook
Manufacturer	OBO
Dimension	M5x65mm
Material	Steel
Surface	Electrogalvanised
Surface standard	EN ISO 19598 / EN ISO 4042
Smallest sales unit	50
Unit of quantity	Units
Weight	3,85 kg
Weight unit	kg/100 pairs
CO2 Footprint (GWP) Cradle-to-Gate	0,094 kg CO2e / 1 Piece

Technical data sheet

Tilting anchor

Item number: 3482057

Dimensions

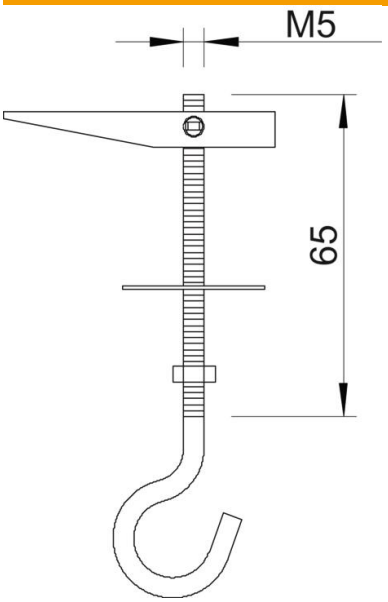

Length	65 mm
Dimension L	65 mm

Technical specifications

Version for	With ceiling hook
Drill hole	13 mm
Drill hole diameter, min.	13 mm
Breaking load	0,4 kN
Thread	M5
Thread type	Metric
hook diameter	16 mm
With washer	yes
Protection ring for ceramics	no