Technical data sheet

Tilting anchor

Item number: 3482103

Two washers and two hexagonal nuts, with threaded shank.

CE

St	Steel
G	Electrogalvanized

Master data

Item number	3482103
Type	456 M5x100 G
Description 1	Tilting anchors
Manufacturer	OBO
Dimension	M5x100mm
Material	Steel
Surface	Electrogalvanised
Surface standard	EN ISO 19598 / EN ISO 4042
Smallest sales unit	50
Unit of quantity	Units
Weight	3,81 kg
Weight unit	kg/100 pairs
CO2 Footprint (GWP) Cradle-to-Gate	0,0902 kg CO2e / 1 Piece

Technical data sheet

Tilting anchor

Item number: 3482103

Dimensions

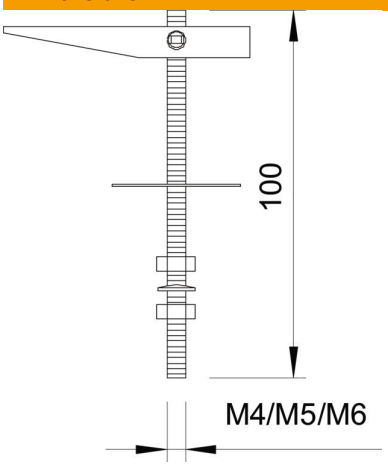

Length	100 mm

Technical specifications

Version for	With threaded shaft
Drill hole	13 mm
Drill hole diameter, min.	13 mm
Breaking load	0,7 kN
Thread	M5
Thread type	Metric
With washer	yes
Protection ring for ceramics	no